Chapter 2 Intro to Networking Exam

Candidate: Dunkan Gibson (dunkan.gibson)
Date: 8/24/2021 8:49:30 pm • Time spent: 21:07

Score: 95% Passing Score: 80%

Question 1: ✔ Correct

Which of the following connectors is used with Ethernet 100BaseT networks?

- RJ11
- BNC
- ➡ RJ45
- ST

EXPLANATION

RJ45 connectors are used with Ethernet 100BaseT networks.

RJ11 connectors are used with phone, dial-up internet, and DSL modem connections. BNC connectors are used with coaxial cable. ST connectors are used with fiber optic cable.

REFERENCES

LabSim for Network Pro, Section 2.1.

Question 2: ✔ Correct

Consider the 850 nm multimode fiber optic cable shown below. How much loss can you expect between the transmitter and the receiver?

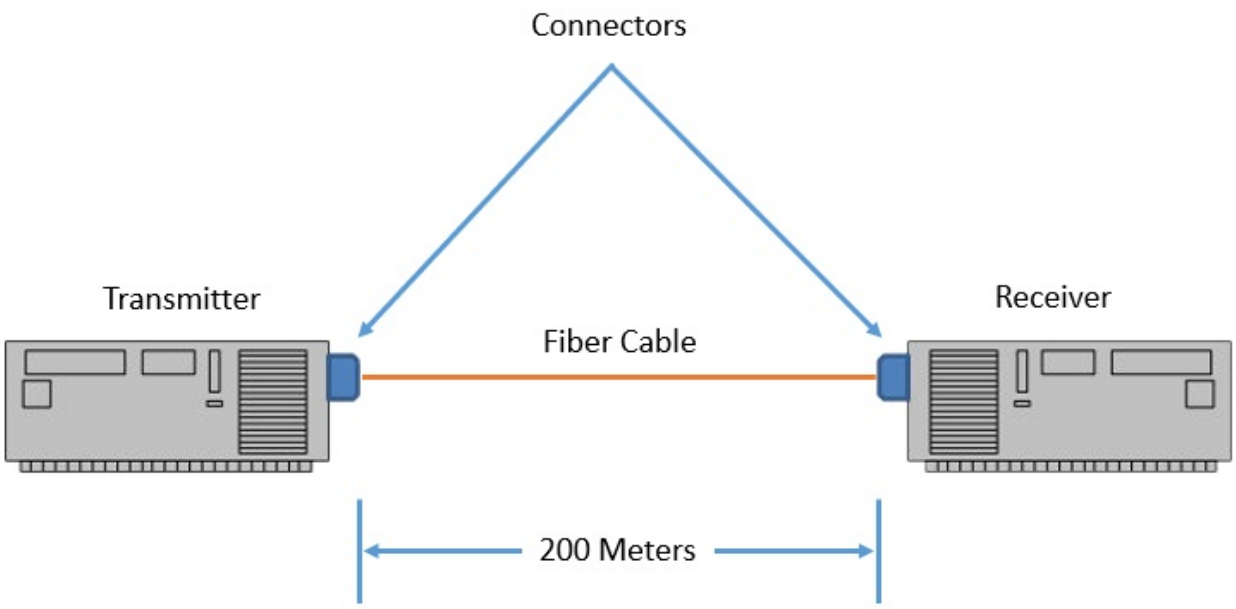

- -0.6 dB
- -0.3 dB
- ➡ -1.2 dB
- -0.9 dB

EXPLANATION

When calculating a loss budget for a segment of fiber optic cable, use the following guidelines:

- Connectors = 0.3 dB loss each
- Splices = 0.3 dB loss each
- Multimode cabling = 3 dB loss per 1000 meters (850 nm) or 1 dB loss per 1000 meters (1300 nm)
- Single mode cabling = 0.5 dB loss per 1000 meters (1310 nm) or 0.4 dB loss per 1000 meters (1550 nm)

In this scenario, there are two connectors (0.3 dB loss each) and 200 meters of 850 nm multimode cable (.2 * 3 dB) for a total expected loss of 1.2 dB. Note that dirty or poorly polished connectors can dramatically increase the amount of loss in the cable.

REFERENCES

LabSim for Network Pro, Section 2.5.

Question 3: ✔ Correct

You have decided to implement Gigabit Ethernet on your network. Each switch port is connected to a single device.

Following the installation, you find one device connected to a switch that is only running at 100 Mbps.

Which of the following are likely causes?

- Collisions
- Switching loop
- Incorrect VLAN
- ➡ Crosstalk
- Short

EXPLANATION

Crosstalk is interference caused by signals within the twisted pairs of wires. For example, current flow on one wire causes a current flow on a different wire. Crosstalk and other miswiring problems typically mean that a cable does not operate at the desired standard. Use a cable certifier to verify that that cable is properly configured to support the rated speed.

A short is where the signal is received on an incorrect wire. A short will typically mean the cable does not work at all or communications are very limited and extremely slow.

Collisions are eliminated when you connect a single device to each switch port. A switching loop occurs when there are multiple active paths between two switches. Switching loops lead to incorrect entries in a MAC address table, making it appear that a device is connected to the wrong port and causing unicast traffic to circulate in a loop between switches. VLANs create logical groupings of computers based on switch port. Because devices on one VLAN cannot communicate with devices in different VLANs, incorrectly assigning a port to a VLAN might prevent a device from communicating through the switch.

REFERENCES

LabSim for Network Pro, Section 2.5.

Question 4: ✔ Correct

You are installing networking wiring for a new Ethernet network at your company's main office building. The project specifications call for Cat 5e UTP network cabling and RJ45 wall jacks. Near the end of the project, you run out of wire before the last few runs are complete. You have a spool of Cat 3 network cable in storage. Upon investigation, it appears very similar to Cat 5e wiring.

Should you use Cat 3 cabling as a substitute for Cat 5e cabling to finish the project?

- ➡ No. Cat 5e cabling has more twists per inch than Cat 3 cabling, reducing cross-talk and supporting higher data rates.
- No. The sheath surrounding Cat 5e cable is much thicker than the Cat 3 sheath, creating an extra layer of shielding that reduces cross-talk and supports higher data rates.
- No, Category 3 cabling doesn't support RJ-45 connectors.
- Yes. You can use Cat 3 cabling as a substitute for Cat 5e cabling, as they are electrically identical.
- No. Cat 5e cabling uses a thicker copper wire than Cat 3 cable, enabling higher data transmission rates.

EXPLANATION

While Cat 3 and Cat 5e cabling may appear similar physically, they are electrically different. Cat 5e cabling is twisted much tighter than Cat 3 cabling. This reduces cross talk and enables Cat 5e wiring to support much faster data transmission rates.

REFERENCES

LabSim for Network Pro, Section 2.1.

Question 5: ✔ Correct

When would you typically use an RJ11 connector?

- When using single-mode fiber optic cables
- When using Cat 5 or higher cables
- When using multi-mode fiber optic cables
- When using RG-6 cables
- When using Cat 3 cables
- ➡ When connecting a phone to a phone line

EXPLANATION

An RJ11 connector is used for connecting analog telephones to the telephone jacks.

Cat 3, Cat 5, and higher twisted pair cables use RJ45 connectors. Coaxial cables use F-type or BNC connectors. Fiber optic cables use a variety of connectors (ST, SC, LC, MT-RJ, FC).

REFERENCES

LabSim for Network Pro, Section 2.1.

Question 6: ✔ Correct

You need to terminate a Cat 6 UTP cable with an RJ45 connector. Your organization's IT policy states that all cable connectors must be wired according to TIA568A standards.

Drag the UTP wire on the left to the correct pin in the RJ45 connector on the right.

Pin 1 ✔ White with green stripe	Pin 2 ✔ Solid green	Pin 3 ✔ White with orange stripe
Pin 4 ✔ Solid blue	Pin 5 ✔ White with blue stripe	Pin 6 ✔ Solid orange
Pin 7 ✔ White with brown stripe	Pin 8 ✔ Solid brown	

EXPLANATION

The T568A wiring standard specifies the following pin-out for RJ45 connectors:

- Pin 1: White with green stripe
- Pin 2: Solid green
- Pin 3: White with orange stripe
- Pin 4: Solid blue
- Pin 5: White with blue stripe
- Pin 6: Solid orange
- Pin 7: White with brown stripe
- Pin 8: Solid brown

REFERENCES

LabSim for Network Pro, Section 2.4.

Question 7: ✔ Correct

Of the following cables, which offer the best protection against EMI?

- ➡ Single-mode fiber optic
- RG-6
- Cat 5e
- Cat 5

EXPLANATION

Fiber optic cables offer the best protection against electromagnetic interference (EMI).

REFERENCES

LabSim for Network Pro, Section 2.3.

Question 8: ✔ Correct

Which of the following connectors is used with fiber optic cables and requires that you use a twisting motion to connect it?

- SC
- LC
- F-type
- BNC
- ➡ ST

EXPLANATION

The ST connector is used with fiber optic cable and uses a twist-type connector. To remember the difference between ST and SC connectors, use the mnemonics Set-and-Twist and Set-and-Click.

SC and LC connectors are used with fiber optic cables, but plug in instead of twist. F-type and BNC connectors use a twist to connect, but are used with coaxial cables.

REFERENCES

LabSim for Network Pro, Section 2.3.

Question 9: ✔ Correct

Which of the following cable types often includes a solid plastic core that keeps the twisted pairs separated?

- Cat 5e
- ➡ Cat 6
- Cat 3
- Cat 5

EXPLANATION

Cat 6 cables include a solid plastic core that keeps the twisted pairs separated and prevents the cable from being bent too tightly.

REFERENCES

LabSim for Network Pro, Section 2.1.

Question 10: ✔ Correct

Users report that the internet is no longer accessible. You suspect that the line connecting your building to the internet is not working properly.

Which of the following allows the service provider to remotely test the local loop?

- ➡ Smartjack
- Horizontal cross connect
- Loopback plug
- Demarc
- Demarc extension

EXPLANATION

A smartjack is a special loopback plug installed at the demarcation point for a WAN service. Technicians at the central office can send diagnostic commands to the smart plug to test connectivity between the central office and the demarc.

A smartjack is similar to a loopback plug; however, the loopback plug must be manually inserted into a jack to test the line, while the smartjack is a special plug that includes loopback support and can be used to test the local loop remotely. Your provider's technicians can use a smartjack to diagnose the local loop without visiting your location.

The demarcation point (demarc) is the line that marks the boundary between the telco equipment and the private network or telephone system. A demarc extension extends the demarcation point from its original location to another location within the building. A horizontal cross connect connects wiring closets on the same floor.

REFERENCES

LabSim for Network Pro, Section 2.5.

Question 11: ✔ Correct

Why might you use an RJ11 connector?

- You want to connect the 10BaseT network card in your computer to a switch.
- ➡ You want to connect your computer to the internet with a DSL modem.
- You want to upgrade your 10BaseT network to 100BaseTX.
- You want to test a network cable to see if there is a break in the line.

EXPLANATION

RJ11 connectors are typically used for telephones and modems.

REFERENCES

LabSim for Network Pro, Section 2.1.

Question 12: ✔ Correct

You are working with an older 10Base2 Ethernet network.

Which of the following connector types will you most likely encounter?

- RJ11
- ST
- ➡ BNC
- F-Type

EXPLANATION

A 10Base2 Ethernet network (also called a Thinnet) is an older type of network that uses coaxial cables with BNC connectors for communication.

F-type connectors are used for cable and satellite TV connections as well as broadband cable connections. RJ11 connectors are typically used for dial-up and DSL connections. ST connectors are used with fiber optic cables.

REFERENCES

LabSim for Network Pro, Section 2.2.

Question 13: ✕ Incorrect

You are preparing to attach wires in a 110 block. You want to connect the wires and trim off the excess at the same time.

Which of the following should you do? (Select two. Each answer is part of the complete solution.)

- [x] ~~Point the cut side of the tool towards the connected end of the wire.~~
- [ ] Point the cut side of the tool towards the wire end.
- [ ] Use a punch down tool with a straight blade.
- [x] Use a punch down tool with a notched blade.

EXPLANATION

Use a punch down tool to connect wires to a 110 or 66 block. When using a punch down tool, choose the right blade for the job:

- Use a notched blade for a 110 block.
- Use a straight blade for a 66 block.
- For both blade types, you can use the end without a cutting blade if you want to punch down without cutting the wire.

When using the cutting blade, point the cut side of the punch down tool towards the wire end that you want to trim.

REFERENCES

LabSim for Network Pro, Section 2.4.

Question 14: ✔ Correct

You are working with an existing fiber optic installation in your building. You want to know the length of each cable that runs through the walls.

Which tool should you use?

- Multimeter
- Toner probe
- Smartjack
- ➡ OTDR

EXPLANATION

An optical time domain reflector (OTDR) sends light pulses on a cable to discover information about the cable. The results of this test can be used to:

- Estimate the length of a wire.
- Measure the cable impedance.
- Identify locations of splices and connectors on the wire.
- Identify shorts and open circuits, and the location of the fault.

A TDR performs the same tests on copper cables.

Use a toner probe to locate the end of a wire from a wall jack to the punch down block. Use a multimeter to measure the electrical properties of a device, such as voltage, amps, and resistance. A *smart jack* is a special loopback plug installed at the demarcation point for a WAN service. Technicians at the central office can send diagnostic commands to the smart plug to test connectivity between the central office and the demarc.

REFERENCES

LabSim for Network Pro, Section 2.5.

Question 15: ✔ Correct

You are building a new network for a small startup financial services company. Security is paramount, so each organization within the company will have their own network segments separated by routers. Funds are limited, and you have been asked to keep costs to a minimum.

You have acquired a used fiber optic switch and want to use it to create a fiber optic backbone that interconnects all of the routers. You purchased several used multi-mode GBIC modules on eBay that you will install in each router to allow them to connect to the switch.

Both the switch and the GBIC modules use MTRJ connectors. You purchased several used 1-meter multi-mode patch cables from Amazon. But when they arrived, you noticed that they use LC connectors. Fortunately, with some force, you found that you are able to get the LC connectors on the cables to lock into the MTRJ connectors on the GBIC modules and on the switch.

Will this implementation work?

- ➡ No. You should purchase patch cables that use MTRJ connectors.
- No. You should use a specialized backbone fiber optic switch to create a backbone network for routers.
- Yes. All of the requirements for implementing a fiber optic network have been met.
- No. You should use single-mode patch cables to connect a GBIC module to a switch.

EXPLANATION

For light to pass through a fiber optic connector, the fiber within the jack must line up perfectly with the fiber in the connector. Using the wrong connector will result in misaligned fibers. This will disrupt the light signal, even if you are able to successfully lock the connector into the jack. In this scenario, you should purchase patch cables that use MT-RJ connectors.

REFERENCES

LabSim for Network Pro, Section 2.5.

Question 16: ✔ Correct

You have a cable internet connection at home. The installer had connected the router near the outside wall of your house with RG6 cable.

You move the cable router a distance of 50 meters using RG8 cables and special connector adapters.

Which condition are you most likely to experience?

- FEXT
- Attenuation
- EMI
- ➡ Echo
- NEXT

EXPLANATION

An impedance mismatch (manifested by echo) occurs when you connect cables and devices that have a different impedance (resistance) rating. Impedance is mostly a factor in coaxial cables used for networking. Be sure to choose cable with the correct rating (50 or 75 ohm) based on the network type, and do not mix cables with different ratings. RG6 cables have a rating of 75 ohms, while RG-8 cables have a rating of 50 ohms.

Attenuation is the loss of signal strength from one end of a cable to the other. Electromagnetic interference (EMI) is interference that comes from an external source. Common sources of EMI include nearby generators, motors (such as elevator motors), radio transmitters, welders, transformers, and fluorescent lighting.

Near-end crosstalk (NEXT) is crosstalk measured on the same end as the transmitter. For example, when a signal is sent on one wire, near-end crosstalk measures the interference on another wire at the same connector near the source of the original signal. Far-end crosstalk (FEXT) is crosstalk measured on the opposite end from the transmitter. For example, when a signal is sent on one wire, far-end crosstalk measures the interference on another wire at the opposite end from the source signal.

REFERENCES

LabSim for Network Pro, Section 2.5.

Question 17: ✔ Correct

Which of the following are characteristics of an LC fiber optic connector? (Choose two.)

- [ ] They are threaded.
- [ ] They use a one-piece bayonet connecting system.
- [x] They are half the size of standard connectors.
- [x] They use a housing and latch system similar to an RJ45 UTP connector.
- [ ] They can be used with either fiber optic or copper cabling.

EXPLANATION

LC fiber optic connectors are small, about half the size of other fiber optic connectors. Their appearance is similar to a typical RJ45 connector used with UTP wiring. Like an RJ45 connector, an LC fiber optic connector uses a small latch to lock the connector in a jack.

REFERENCES

LabSim for Network Pro, Section 2.3.

Question 18: ✔ Correct

You have a small home network connected to the internet using an RG-6 cable. You need to move the router connecting the network to the internet, but can't find any RG-6 cable.

Which cable types could you use instead?

- (●) RG-59
- ( ) RG-58
- ( ) Cat 3
- ( ) Cat 5e

EXPLANATION

RG-6 has an impedance rating of 75 ohms. It is important to use coaxial cables with the same impedance rating. Only RG-59 is rated for 75 ohms.

Connecting coaxial cables with Cat 3 and Cat5e cables requires a media converter.

REFERENCES

LabSim for Network Pro, Section 2.2.

Question 19: ✔ Correct

You have just been hired as a network administrator. A user has just changed offices and needs you to activate the network and telephone connections in his office. However, the wiring at the punch down block is labeled poorly, and you are unable to tell which wires go to the user's office.

What should you do?

- ➡ Use a tone generator to locate the correct wiring.
- Use a punch down tool to locate the correct wiring.
- Use a media tester to locate the correct wiring.
- Install new wiring from the punch down block to the user's office.

EXPLANATION

A tone generator allows you to create a tone at on end of a wire and find the other end by testing all connections at the location of the other end of the wire.

REFERENCES

LabSim for Network Pro, Section 2.5.

Question 20: ✔ Correct

Which type of polish grade uses green-colored connectors to help you keep from using the wrong connector type?

- Physical Contact (PC)
- Ultra Physical Contact (UPC)
- Super Physical Contact (SPC)
- ➡ Angled Physical Contact (APC)

EXPLANATION

Angled Physical Contact (APC) connecters are colored green to differentiate them from non-APC connectors.

Physical Contact (PC), Super Physical Contact (SPC), and Ultra Physical Contact (UPC) connectors do not use any specific coloring designations.

REFERENCES

LabSim for Network Pro, Section 2.5.

Question 21: ✔ Correct

You've connected a cable certifier to an RJ45 wall jack, and the output shown below is displayed on the device. What does this output indicate? (Select two.)

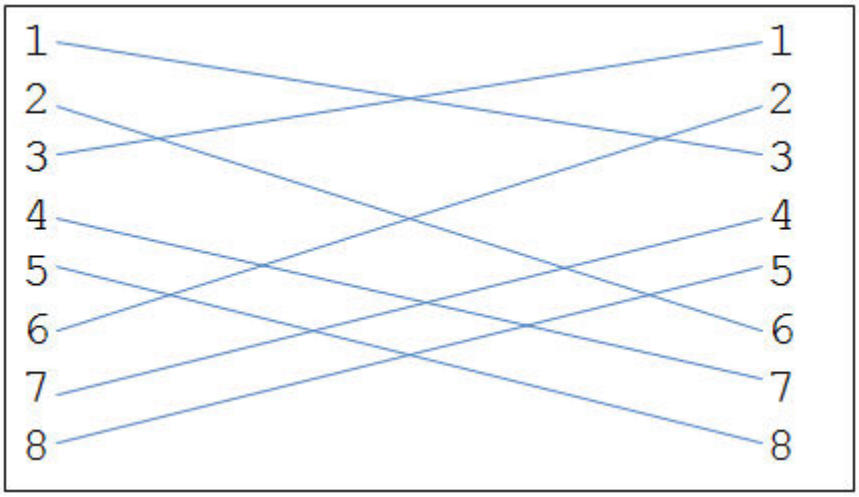

- [ ] There are multiple open pins on this cable.
- [ ] This is a straight-through cable.
- [ ] There are multiple shorts on this cable.
- [x] This is a crossover cable.
- [x] The cable is functioning correctly.

EXPLANATION

In this example, the cable being tested is a correctly wired crossover cable.

Output with x characters between pins indicates that they are shorted. Straight-through connections are displayed using - characters in the output of the cable certifier. Open connections are displayed with no characters or lines between the pin numbers.

REFERENCES

LabSim for Network Pro, Section 2.5.

Question 22: ✔ Correct

Which of the following describes the point where the service provider's responsibility to install and maintain wiring and equipment ends, and the customer's responsibility begins?

- ➡ Demarc
- Punch down block
- IDF
- Vertical cross connect

EXPLANATION

When you contract with a local exchange carrier (LEC) for data or telephone services, they install a physical cable and a termination jack onto your premises. The demarcation point (demarc) is the line that marks the boundary between the telco equipment and the private network or telephone system. Typically, the LEC is responsible for all equipment on one side of the demarc, and the customer is responsible for all equipment on the other side of the demarc.

A punch down block is a block used to connect individual copper wires together. While the demarc might terminate in a punch down block, punch down blocks are used within other locations at the customer site.

An intermediate distribution frame (IDF) is a smaller wiring distribution point within a building. IDFs are typically located on each floor directly above the main distribution frame (MDF), although additional IDFs can be added on each floor as necessary. A vertical cross connect connects the IDF to the MDF on a different floor.

REFERENCES

LabSim for Network Pro, Section 2.4.

Question 23: ✔ Correct

You are creating an Ethernet network for your company. The shipping department is located in a different building that is located 150 meters from the main wiring closet. You use a single Cat6e cable to connect the wiring closet to the shipping building.

Which of the following conditions are you most likely to experience?

- Open circuit
- Crosstalk
- ➡ Attenuation
- Impedance mismatch

EXPLANATION

Attenuation is the loss of signal strength from one end of a cable to the other. The longer the cable, the more attenuation. For this reason, it is important to not exceed the maximum cable length defined by the networking architecture. In this example, the distance from the wiring closet to the other building exceeds the 100 meter maximum for Ethernet.

Impedance is the measure of resistance within the transmission medium. An impedance mismatch occurs when you use cables and devices with different impedance values. When signals move from one cable to another with a different impedance rating, some of the signal is reflected back to the transmitter, distorting the signal.

Crosstalk is interference that is caused by signals within the twisted pairs of wires. An open circuit is a cut in the wire that prevents the original signal from reaching the end of the wire. If you have a short, the signal travels a different path. But if you have an open circuit, the signal does not travel anywhere because electricity cannot flow when the path is disconnected.

REFERENCES

LabSim for Network Pro, Section 2.5.

Question 24: ✔ Correct

Which pins in an RJ45 connector are used to transmit data when used on a 100BaseT Ethernet network? (Select two.)

- [x] Pin 1
- [x] Pin 2
- [ ] Pin 3
- [ ] Pin 4
- [ ] Pin 5
- [ ] Pin 6
- [ ] Pin 7
- [ ] Pin 8

EXPLANATION

On a 100BaseT network cable, the RJ45 pin-outs are as follows:

- Pin 1: Tx+
- Pin 2: Tx-
- Pin 3: Rx+
- Pin 4: Unused
- Pin 5: Unused
- Pin 6: Rx-
- Pin 7: Unused
- Pin 8: Unused

For a 100BaseT cable, Pins 1 and 2 are used to transmit data; pins 3 and 6 are used to receive data.

REFERENCES

LabSim for Network Pro, Section 2.4.

Question 25: ✔ Correct

You want to create a loopback plug using a single RJ45 connector. How should you connect the wires in the connector?

- Connect pin 1 to pin 5 and pin 2 to pin 6.
- Connect pin 1 to pin 3 and pin 2 to pin 4.
- Connect pin 1 to pin 8 and pin 2 to pin 7.
- ➡ Connect pin 1 to pin 3 and pin 2 to pin 6.
- Connect pin 1 to pin 2 and pin 3 to pin 3.

EXPLANATION

To create a loopback plug or a crossover cable, connect pin 1 (Tx+) to pin 3 (Rx+) and pin 2 (Tx-) to pin 6 (Rx-).

Connecting each pin to the opposite pin (1 to 8, 2 to 7, and so on) creates a rollover cable.

REFERENCES

LabSim for Network Pro, Section 2.5.

Question 26: ✔ Correct

Which of the following methods would you use to create a crossover cable?

- Use the T568A standard.
- ➡ Use the T568A standard on one connector and the T568B standard on the other connector.
- Use the BLOG convention.
- Use the T568B standard.
- Use the T568B standard on one connector and the BLOG convention on the other connector.
- Use the T568A standard on one connector and the BLOG convention on the other connector.

EXPLANATION

The easiest way to create a crossover cable is to arrange the wires in the first connector using the T568A standard and arrange the wires in the second connector using the T568B standard. A crossover cable connects the transmit pins on one connector to the receive pins on the other connector (pin 1 to pin 3 and pin 2 to pin 6).

REFERENCES

LabSim for Network Pro, Section 2.4.

Question 27: ✔ Correct

You have a network that occupies the top floor of a three-story building. The WAN service provider has installed the line for the WAN service in a wiring closet on the main floor.

What would you use to relocate the WAN line into a wiring closet on your floor?

- 110 block
- ➡ Demarc extension
- Smart jack
- Horizontal cross connect
- 66 block

EXPLANATION

A demarc extension extends the demarcation point from its original location to another location within the building. The demarc extension typically consists of a single wire bundle that attaches to the existing demarc and supplies a termination point to a different location. You might need a demarc extension if your network occupies an upper floor of a building. The LEC will typically install the demarc into the MDF on the bottom floor, and you will need to install an extension to place the demarc into the IDF on your floor.

A horizontal cross connect joins IDFs on the same floor. Cabling runs horizontally (sideways) between the IDFs. A smart jack is a special loopback plug installed at the demarcation point for a WAN service. Technicians at the central office can send diagnostic commands to the smart plug to test connectivity between the central office and the demarc.

Use 66 and 110 blocks to connect individual wires within a wiring closet. These blocks can be used to connect devices to the WAN service wiring, but are not typically used for installing a demarc extension.

REFERENCES

LabSim for Network Pro, Section 2.4.

Question 28: ✔ Correct

You are connecting Cat 5e cables to a 110 block. What order should you connect the wires in to follow standard wiring conventions?

- White/orange, orange, white/green, blue, white/blue, green, white/brown, brown
- White/brown, brown, white/blue, blue, white/orange, orange, white/green, green
- White/green, green, white/orange, blue, white/blue, orange, white/brown, brown
- ➡ White/blue, blue, white/orange, orange, white/green, green, white/brown, brown

EXPLANATION

When connecting data wires on a 110 block, you typically connect wires in the following order:

- White wire with a blue stripe followed by the solid blue wire.
- White wire with an orange stripe followed by the solid orange wire.
- White wire with a green stripe followed by the solid green wire.
- White wire with a brown stripe followed by the solid brown wire.

Use BLOG (blue-orange-green) to remember the wire order, and remember to start with the white striped wire first.

When adding RJ45 connectors to a drop cable, use one of the following orders based on the standard you want to follow:

- T568A--To use this standard, arrange the wires from pins 1 to 8 in each connector in the following order: GW, G, OW, B, BW, O, BrW, Br.
- T568B--To use this standard, arrange the wires from pins 1 to 8 in each connector in the following order: OW, O, GW, B, BW, G, BrW, Br.

REFERENCES

LabSim for Network Pro, Section 2.4.

Question 29: ✔ Correct

Which type of optical fiber is normally used to connect two buildings that are several kilometers apart?

- Multi-mode
- Fibre Channel mode
- Dual-mode
- ➡ Single-mode

EXPLANATION

In this scenario, you would use single-mode fiber optic cables. Fiber optic is graded as single-mode or multi-mode. Single-mode consists of a single very thin core, which produces fewer reflections. This provides greater effective bandwidth over greater distances.

Multi-mode is less costly than single-mode fiber. Multi-mode is used to transmit over shorter distances, as the rays tend to disperse as the transmission distance increases. Fibre channel is a technology used in storage area networks.

REFERENCES

LabSim for Network Pro, Section 2.3.

Question 30: ✔ Correct

Which of the following uses metal clips placed over plastic slots to connect individual copper wires?

- 25 pair
- 110 block
- 100 pair
- 66 block

EXPLANATION

A 110 block is a punch down block that uses metal clips fitted over plastic pins. To connect wires using a 110 block, place the wires in the plastic slots, attach the metal clip, then punch down the connecting cable on the top of the clip.

A 66 block uses metal pins to connect wires. Wires are placed in the pins, and pins within a row are electrically connected.

25 pair and 100 pair are cable bundles that include multiple pairs of copper wires (either 25 pairs of wires or 100 pairs of wires).

REFERENCES

LabSim for Network Pro, Section 2.4.

Question 31: ✕ Incorrect

You have a network that occupies both floors of a building. The WAN service provider has installed the line for the WAN service in a wiring closet on the main floor.

You have a second wiring closet on the second floor directly above the wiring closet that holds the demarc. Which of the following terms describes the closet on the second floor?

- Demarc extension
- ➡ IDF
- Horizontal cross connect
- MDF
- ~~Vertical cross connect~~

EXPLANATION

An intermediate distribution frame (IDF) is a wiring distribution point within a building that is smaller than the MDF. IDFs are typically located on each floor directly above the MDF, but you can place additional IDFs on each floor as necessary.

The main distribution frame (MDF) is the main wiring point for a building. The MDF is typically located on the bottom floor or basement. The LEC typically installs the demarc to the MDF. A vertical cross connect connects the MDF on the main floor to IDFs on upper floors. Cabling runs vertically (up and down) between the MDF and the IDFs. A horizontal cross connect connects IDFs on the same floor. Cabling runs horizontally (sideways) between the IDFs.

A demarc extension extends the demarcation point from its original location to another location within the building.

REFERENCES

LabSim for Network Pro, Section 2.4.

Question 32: ✔ Correct

You manage a network that uses 1000BaseT Ethernet. You find that one device communicates on the network at only 100 Mbps.

Which tool should you use to test the drop cable and the connection to the network?

- Multimeter
- ➡ Certifier
- Toner probe
- TDR
- Cable tester

EXPLANATION

A cable certifier is a multi-function tool that verifies or validates that a cable or an installation meets the requirements for a specific architecture implementation. For example, you would use a certifier to verify that a specific drop cable meets the specifications for 1000BaseT networking.

A cable tester verifies that the cable can carry a signal from one end to the other and that all wires are in their correct positions. A toner probe is two devices used to trace the end of a wire from a known endpoint into the termination point in the wiring closet. A time domain reflector (TDR) measures the length of a cable or to identify the location of a fault in the cable. A multimeter measures the electrical properties of a device, including voltage, amps, and resistance.

REFERENCES

LabSim for Network Pro, Section 2.5.

Question 33: ✔ Correct

You are adding new wires in your building for some new offices. The building has a false ceiling that holds the lights and provides an air path for heating and air conditioning. You would like to run your Ethernet cables in this area.

Which type of cable must you use?

- Cat 5e or Cat 6a cables
- Fiber optic cables
- ➡ Plenum rated cable
- PVC jacketed cables
- STP cables

EXPLANATION

Plenum rated cable is fire resistant and non-toxic. You must use plenum rated cable to wire in air spaces used by heating and air conditioning systems. You cannot use PVC jacketed cable to wire above ceilings because it is toxic when burned.

Cat 5e cables provide better EMI protection than Cat 5 cables, and Cat 6a cables are an improvement over Cat 6 specifications, but neither of these qualities are a requirement for use in a ceiling area. If the area has a lot of EMI, you might consider using STP or fiber optic cables, but this is not a requirement for wires were in a ceiling area. Typically, you can avoid EMI sources by re-routing cables.

REFERENCES

LabSim for Network Pro, Section 2.1.

Question 34: ✔ Correct

Which of the following are characteristics of coaxial network cable? (Select three.)

- [x] It uses two concentric metallic conductors.
- [x] It has a conductor made from copper in the center of the cable.
- [ ] It is composed of four pairs of 22-gauge copper wire.
- [ ] It uses two concentric conductors that are made from plastic or glass and conduct light signals.
- [ ] The conductors within the cable are twisted around each other to eliminate cross-talk.
- [x] The ends of the cable must be terminated.
- [ ] It uses RJ45 connectors.

EXPLANATION

Coaxial cable is composed of a central copper conductor surrounded by an insulator, which is then surrounded by a second metallic mesh conductor. The name *coaxial* is derived from the fact that both of these conductors share a common axis. Both ends of a coaxial cable must be terminated.

REFERENCES

LabSim for Network Pro, Section 2.2.

Question 35: ✔ Correct

To answer this question, complete the lab using the information below.
You have already answered this question.
You are not allowed to view the lab again.

Launch Lab

You completed the lab correctly.

View Lab Report

Question 36: ✔ Correct

You are working with 25 pair wires and 66 blocks. You have pushed the wires onto the 66 block, but now you need to cut off the excess end of each wire.

Which tool should you use?

- Snips
- ➡ Punch down tool
- Cable stripper
- Needle nose pliers

EXPLANATION

Use a punch down tool to push wires into 66 or 110 blocks and cut wires at the same time. The punch down tool has a blade on one side that cuts off the excess wires.

Use snips to cut cables or wires. Use a cable stripper to remove the plastic covering for a cable. When making drop cables or using punch down blocks, do not remove the plastic covering for individual wires.

REFERENCES

LabSim for Network Pro, Section 2.4.

Question 37: ✔ Correct

You have a network that occupies all three floors of a building. The WAN service provider has installed the line for the WAN service in a wiring closet on the main floor.

You have a second wiring closet on the main floor. You need to connect the two wiring closets. Which of the following are typically used to connect the two wiring closets? (Select two.)

- [ ] Smart jack
- [x] 25 pair
- [x] Horizontal cross connect
- [ ] Vertical cross connect
- [ ] Demarc extension

EXPLANATION

A horizontal cross connect joins wiring closets on the same floor. 25 pair or 100 pair wiring punched down into 66 or 110 blocks are often used to connect the wiring closets together.

A vertical cross connect connects the IDF to the MDF on a different floor.

The demarcation point (demarc) is the line that marks the boundary between the telco equipment and the private network or telephone system. A demarc extension extends the demarcation point from its original location to another location within the building. A smart jack is a special loopback plug installed at the demarcation point for a WAN service. Technicians at the central office can send diagnostic commands to the smart plug to test connectivity between the central office and the demarc.

REFERENCES

LabSim for Network Pro, Section 2.4.

Question 38: ✔ Correct

You have just signed up for a broadband home internet service that uses coaxial cable. Which connector type will you most likely use?

- RJ45
- SC
- BNC
- ➡ F-type
- ST
- RJ11

EXPLANATION

Use an F-type connector for broadband cable connections that use coaxial cable.

Use a BNC connector for 10Base2 Ethernet networks. Use an RJ11 connector for modem connections to a phone line. Use an RJ45 connector for an Ethernet network that uses twisted pair cable. Use ST and SC connectors for fiber optic cables.

REFERENCES

LabSim for Network Pro, Section 2.2.

Question 39: ✔ Correct

You are making Ethernet drop cables using Cat5e cable and RJ45 connectors. You need to remove the plastic coating over the cable to expose the individual wires.

Which tool should you use?

- Snips
- Punch down tool
- Needle nose pliers
- ➡ Cable stripper

EXPLANATION

Use a cable stripper to remove the plastic jacket or sheath for a cable. When making drop cables or using punch down blocks, do not remove the plastic covering for individual wires.

Use snips to cut cables. Use a punch down tool to push wires into 66 or 110 blocks and cut wires at the same time.

REFERENCES

LabSim for Network Pro, Section 2.4.

Question 40: ✔ Correct

Which recommendation should you follow while using 110 blocks for connecting Cat 5 and higher data cables?

- Use C-5 connectors.
- ➡ Keep wire pairs twisted up to within one-half of an inch of the connector.
- Connect wires using the T568A standard.
- Connect wires using the T568B standard.

EXPLANATION

While using Cat5 (or higher) wiring, preserve the twists in each wire pair to within one-half of an inch of the connecting block.

Use C-4 connectors to connect four pairs of wires. When connecting data wires on a 110 block, you typically connect wires in the following order:

- White wire with a blue stripe followed by the solid blue wire.
- White wire with an orange stripe followed by the solid orange wire.
- White wire with a green stripe followed by the solid green wire.
- White wire with a brown stripe followed by the solid brown wire.

T568A and T568B are used to connect wires within an RJ45 connector when making drop cables.

REFERENCES

LabSim for Network Pro, Section 2.4.

Copyright © 2021 TestOut Corporation All rights reserved.